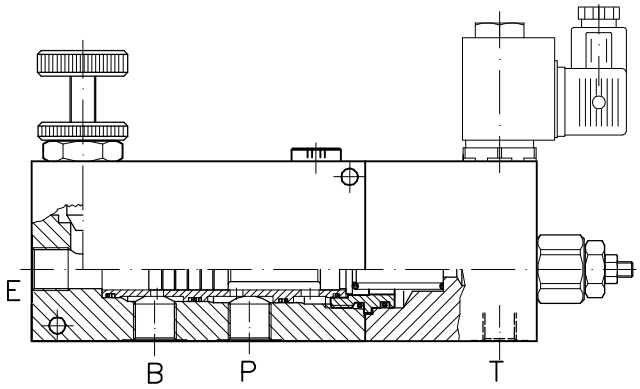


## 工作性能 PERFORMANCE

| | | |
|---|---|---|
| 标称尺寸 | | Rated size |
| 最小/最大流量 | **55/90 l/min - 14.5/24 GPM** | Inlet flow rate |
| 最大工作压力 | **350 bar - 5075 PSI** | Max working pressure |
| 室温 | **-30°C + 50°C** | Room temperature |
| 油温 | **-30°C + 80°C** | Oil temperature |
| 推荐过滤精度 | **50 micron** | Recommended filtration |
| 重量 | **3.977 Kg. 3/8” GAS** | Weight |
| 重量 | **4.019 Kg. 1/2” GAS** | Weight |

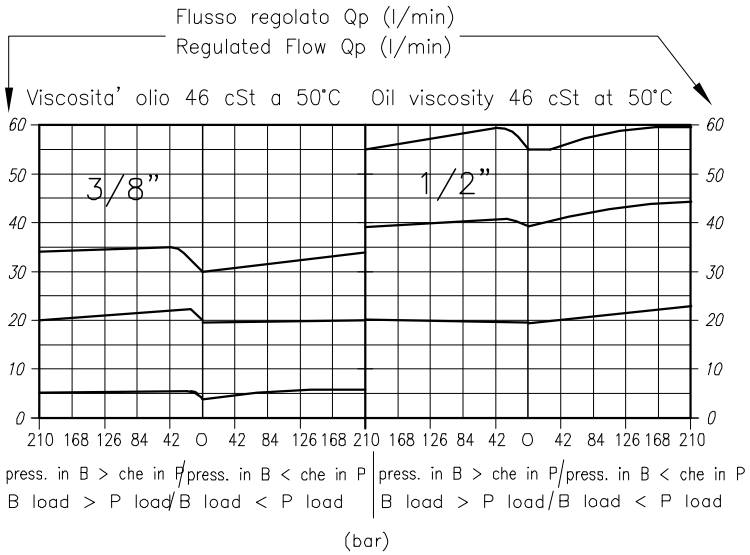


50℃时油的粘度为46cSt
**Oil viscosity 46 cSt at 50°C**

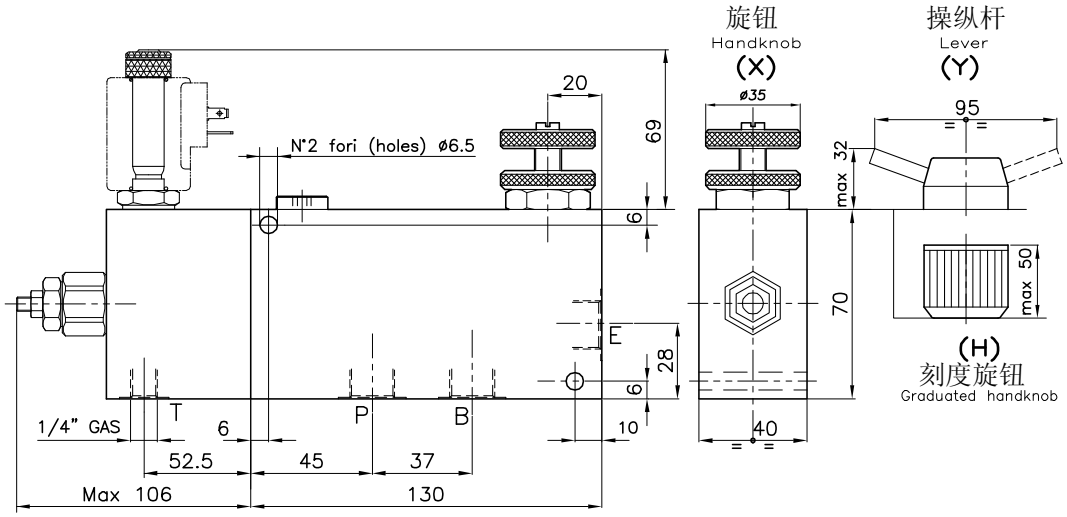


典型液压回路举例

## TYPICAL CIRCUIT EXAMPLE

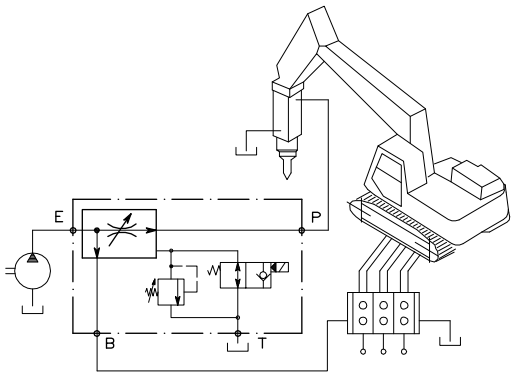


尺寸

## DIMENSIONS

| 调节范围 Setting range | | 油口尺寸 Port size E-P-B GAS (BSPP) | QP l/min - GPM | QE l/min - GPM |
|---|---|---|---|---|
| 194 | 195 | 3/8" | 30-7.9 | 55-14.5 |
| 196 | 197 | 1/2" | 55-14.5 | 90-24.8 |

QE=E口最大允许进入流量，l/min

**QE = Max admitted inlet flow "E" - l/min**

QP=优先口P最大输出流量，l/min

**QP = Max delivery in priority "P" - l/min**

订货细节

## HOW TO ORDER

004 194 0 X 0

| 调节范围 / Setting range | |
|---|---|
| 194 | 195 |
| 196 | 197 |
| 调节范围为20-350 bar Setting range 20÷350 bar | 调节范围为10-210 bar Setting range 10÷210 bar |

| 调节类型 Adjustment | |
|---|---|
| X | 扳手 Spanner |
| Y | 旋钮 Handknob |
| H | 刻度旋钮 Graduated handknob |